VOLVO BACKHOE LOADER

BL61, BL61 PLUS

- **Gross Power:**
  SAE:
  BL61 : 86 HP (64 kW)
  BL61 Plus : 94 HP (70 kW)
- **Net Power:**
  EEC 80/1269:
  BL61 : 83 HP (62 kW)
  BL61 Plus : 91 HP(68 kW)
- **Operating Weight:**
  8168 kg
- **Bucket Capacities:**
  Loader: 1000 l
  Backhoe: 190 l
- **Maximum Digging depth:**
  4280 - 5343 mm

- **VOLVO exclusive "Self-Levelling" linkage,** single cylinder offers an impressive digging force and excellent visibility.
- **Backhoe boom is of a curved design** for easy loading.
- **Backhoe cylinders are cushioned** to eliminate jolting.
- **Rigid hydraulic lines** are cleanly routed inside the boom.

- **Hydraulic circuit is open centre, load sensing,** for optimum power using.
- **Control valve is "Flow Sharing"** for simultaneously performing functions.
- **Excellent serviceability at the ground level** via a fully rear-tilting bonnet.
- **Service points are grouped together** and easily accessible.

MORE CARE. BUILT IN.

SPECIFICATIONS

Engine

Low emission, turbocharged 4-cylinder, liquid-cooled Volvo diesel engine with 40% torque rise.

Model	Volvo D4D
Net power	BL61: 62 kW (83 hp)
	BL61 Plus: 68 kW (91 hp)
Gross power	BL61: 64 k W (86 hp)
	BL61 Plus: 70 kW (94 hp)
Displacement	4.04 l (246 in^3)
Compression ratio	19:1
Rated speed	2,200 rpm

Electrical system

Weatherproof connections.

Standard 12-Volt, 690 CCA battery with dual battery option. Standard 95 amp alternator.

Drivetrain

Foot operated differential lock allows 100% full lock on rear axle. Final reduction in wheel hubs by a three pinion outboard planetary drive.

Travel speed

Maximum speed, forward/reverse

1	5.7 km/h (3.5 mph)
2	BL61: 9.2 km/h (5.7 mph)
	*BL61 Plus: 9.4 km/h (5.8 mph)
3	BL61: 18.5 km/h (11.5 mph)
	*BL61 Plus: 19 km/h (11.8 mph)
4	BL61: 37 km/h (23 mph)
	*BL 61 Plus: 35.9 km/h (22.3 mph)

* with powershift.

Brakes

Multi-plate, oil-immersed, servo power-assisted, self-adjusting inboard disc brakes with four wheel drive automatically engaged in third and fourth gear. (4WD only). Independent, interlocking, twin serrated brake pedals. Parking brake engaged by a mechanical lever.

Steering

Hydrostatic steering with protected double acting single cylinder behind the front axle with remote grease fitting for axle pivot pin.

2WD Turns lock to lock	BL61: 4.25
4WD Turns lock to lock	4
2WD Steering angle	BL61: 56°
4WD Steering angle	55 °

4WD Turning circle: Between walls

Without brakes	11.4 m (37'5")

4WD Loader turning circle: Between curbs

Without brakes	9 m (29'6")

2WD Turning circle: Between walls

With brakes	9.8 m (32'2")
Without brakes	10.6 m (34'9")

2WD Loader turning circle: Between curbs

With brakes	7 m (22'12")
Without brakes	8 m (26'3")

Hydraulic system

Open-centre, flow-sharing with gear type pump powering the digging elements and attachments.

Max flow	114 l/min (30.1 us gal/min)
Working pressure	
Excavator	250 bar (3,626 psi)
Loader	BL61: 220 bar (3,191 psi)
	BL61 Plus: 235 bar (3,408 psi)
System capacity	130 l (34.3 us gal)

Weight

4WD cab machine with general-purpose loader bucket, 610 mm heavy-duty backhoe bucket, standard 105 kg cast iron front bumper, 75 kg operator, full fuel tank and extendible dipper.

Operating weight	8,168 kg (18,007 lb)

Transmission

Completely sealed W300 diameter torque converter mounted to engine flywheel with a flexplate. Powershuttle gear box with four forward and four reverse fully synchronized gears. Electro-hydraulic forward/reverse switch on steering column.

Capacities

Cooling system	19 l (5 US gal)
Fuel tank	120 l (31.7 US gal)
Engine oil (w/filter)	14 l (3.7 US gal)

Rear axle

Differential oil capacity	14.5 l (3.8 US gal)

Front axle (4WD)

Differential oil capacity	6.5 l (1.7 US gal)

Hydraulic reservoir	41 l (10.8 US gal)
Hydraulic system	130 l (34.3 US gal)

Backhoe performance

High performance backhoe is closed box welded, narrow and curved and includes a hydraulic boom lock and manual swing locking pin. Cast iron swing post. Cushioned swing, boom and bucket cylinders.
Extendible dipper increases the reach by 990 mm. Manually and externally adjustable nylatron extendible dipper wear pads.

Standard dipper

Bucket width	610 mm (24 in)
Bucket capacity	0.20 m^3 (7.1 cu ft)
Bucket digging force (SAE J1179)	
	52.8 kN (11,861 lb)
Dipper digging force (SAE J1179)	
	32.6 kN (7,324 lb)
Bucket rotation	194°

Extendible Dipper

Bucket width	610 mm (24 in)
Bucket capacity	0.20 m^3 (7.1 cu ft)
Bucket digging force (SAE J1179)	
	52.8 kN (11,861 lb)
Dipper digging force (SAE J1179)	
Ret.	32.6 kN (7,324 lb)
Ext.	23.9 kN (5,379 lb)
Bucket rotation	194°

Loader performance

Low-effort, levers control all loader functions. Loader features a single cylinder and is self-levelling, with float and return-to-dig. Loader is box weld constructed with large diameter torque tube and friction welded dual lift cylinders. Optional Boom Suspension System (ride control). 1,000 l (1.3 cu/yd^3), 2,350 mm (93 in) wide, General Purpose or Multi-Purpose buckets with optional teeth and reversible bolt-on cutting edges. Integral safety strut. Weekly (50-hour) greasing intervals.

Lift capacity at full height (with General Purpose bucket)	
	BL61: 2,691 kg (5,933 lb)
	BL61 Plus: 2,922 kg (6,442 lb)
Bucket breakout force	
	BL61: 43.9 kN (9,866 lb)
	BL61 Plus: 49.6 kN (11,155 lb)
Loader arm breakout force	
	BL61: 47 kN (10,571 lb)
	BL61 Plus: 50.1 kN (11,270 lb)

Cycle Times:

Raise to full height	
	4.1 sec
Dump time	1.9 sec
Curl time	2.4 sec
Lower	3.4 sec

Tyres

Rear tyres	Standard tyres 16.9 x 28
2WD Front	10.5/80 x 18
4WD Front	12.5/80 x 18

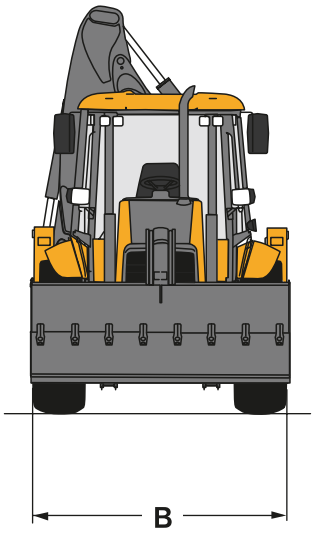

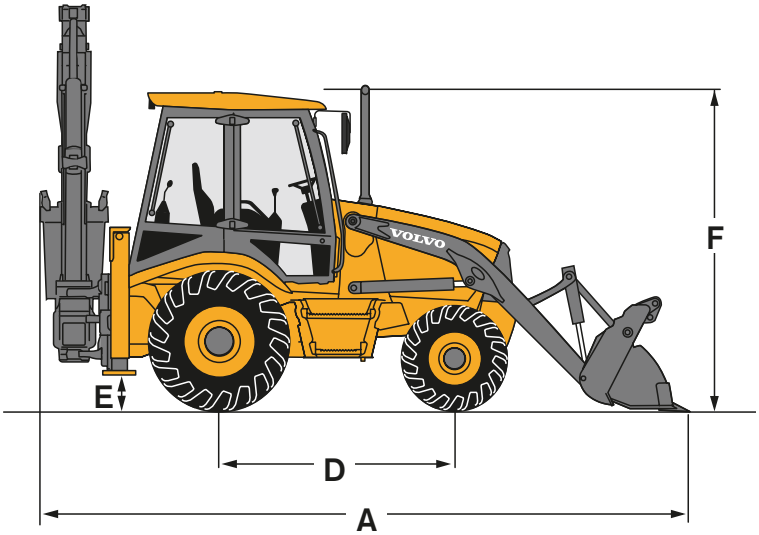

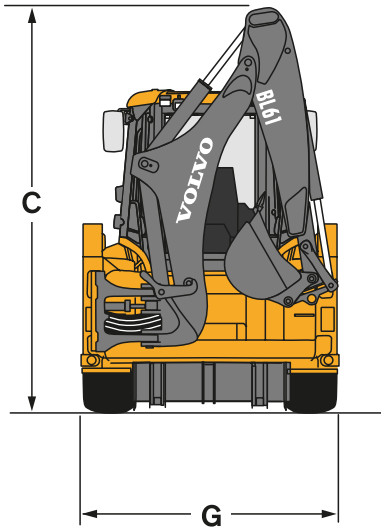

Dimensions - Transport Position

A - Overall length	5,832 mm (19'2")
B - Overall width	2,477 mm (8'2")
C - Overall height	3,710 mm (12'2")
D - Wheelbase 4wd	2,146 mm (7'0")
E - Ground clearance – frame	3,70 mm (1'3")
F - Height to top of ROPS (cab)	2,925 mm (9'7")
G - Stabilisers Width	2,300 mm (7'7")

Loader buckets	Width	Weight	Capacity	Teeth nbr.
Standard bucket	2,350 mm 93 in	450 kg 992 lb	1,000 l 1.3 cu/yd³	8
4 in 1 bucket	2,350 mm 93 in	784 kg 1728 lb	1,000 l 1.3 cu/yd³	8

Backhoe buckets	Width	Weight	Capacity	Teeth nbr.
Standard bucket	300 mm 12 in	90 kg 198 lb	74 l 0.10 yd³	3
	400 mm 16 in	101 kg 223 lb	110 l 0.14 yd³	3
	450 mm 18 in	109 kg 240 lb	128 l 0.17 yd³	4
	610 mm 24 in	126 kg 278 lb	190 l 0.25 yd³	4
	910 mm 36 in	164 kg 362 lb	309 l 0.40 yd³	6
Grading bucket	1,215 mm 48 in	135 kg 298 lb	160 l 0.21 yd³	0
	1,515 mm 60 in	158 kg 348 lb	210 l 0.27 yd³	0

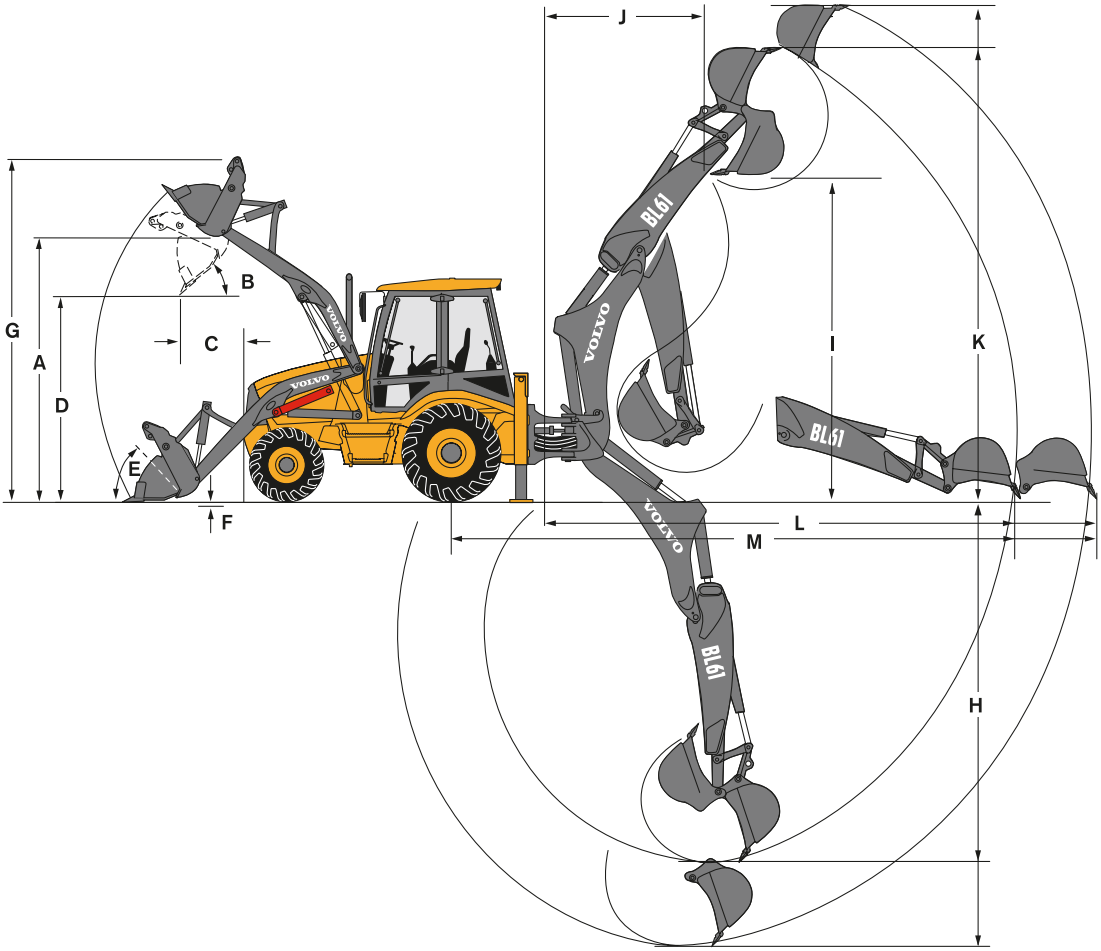

Loader dimensions

A - Height to hinge pin,	3,404 mm (11'2")
B - Dump angle	50°
C - Dump reach	873 mm (2'10")
D - Dump height	2,661 mm (8'9")
E - Rollback at ground	45°
F - Dig depth below grade	212 mm (8")
G - Height to upper edge of bucket	4,413 mm (14'6")
Max. grading angle	116°

Backhoe dimensions

Standard dipper

H - SAE dig depth	4,280 mm (14')
Dig depth - 610 mm flat bottom	4,256 mm (13'11")
I - Loading height	3,936 mm (12'11")
J - Loading reach	2,829 mm (9'3")
K - Operating height	5,582 mm (18'4")
L - Reach from swing post	5,867 mm (19'3")
M - Reach from rear axle	7,180 mm (23'7")
Sideshift offset from centreline	574 mm (1'11")
Side wall clearance	601 mm (2')

Extendible dipper dimensions

H - SAE dig depth	Ret - 4,280 mm (14')	Ext - 5,343 mm (17'6")
Dig Depth - 610 mm flat bottom	Ret - 4,256 mm (13'11")	Ext - 5,316 mm (17'5")
I - Loading height	Ret - 3,936 mm (12'11")	Ext - 4,557 mm (14'11")
J - Loading reach	Ret - 2,829 mm (9'3")	Ext - 3,700 mm (12'2")
K - Operating height	Ret - 5,582 mm (18'4")	Ext - 6,206 mm (20'4")
L - Reach from swing post	Ret - 5,867 mm (19'3")	Ext - 6,836 mm (22'5")
M - Reach from rear axle	Ret - 7,180 mm (23'7")	Ext - 8,149 mm (26'9")

STANDARD EQUIPMENT

Engine
BL61: Volvo D4D turbocharged diesel engine (62 kW).
BL61 Plus: Volvo D4D turbocharged diesel engine (68 kW).
Ground line fuel fill with 120 litre capacity.
Front grill.

Electrical System
Battery, 690 CCA.
Alternator 95 Amp.

Service and Maintenance
Tool box - external.
External battery box.

Hydraulic System
Hydraulic oil cooler.
Fixed flow system with gear pump.
“Flow Sharing” System.

Lighting
Hazard flasher/direction indicators.
Light, working (2 front, 2 rear).
Front headlights.

Instrumentation & controls
Gauges:
- Coolant temperature
- Fuel level
- Tachometer
- Hour recorder

Headliner.
Warning and control lamps:
- Preheating element engine
- High coolant temperature engine
- Low oil pressure engine
- Air filter engine
- High oil temperature transmission
- Service indicator
- Battery charging
- Hydraulic oil filter
- High hydraulic oil temperature
- Low hydraulic oil temperature
- Warning and control lamps.

Power socket (1).
Horn.
Warning buzzer.
Throttles, hand and foot.

Driveline
Four wheel drive.
Oil immersed disc brakes.
Differential lock.
Fast reversing shuttle, all gears.
Torque convertor.
Four-speed syncromesh transmission.
Transmission de-clutch on loader joystick.
Tyres.

Cab, Exterior
Left/right side doors with locks.
4 side opening windows with partial & full hold open.
One-piece opening rear window.
Front windscreen - laminated.
Mirrors external (2).
All tinted glass.

Cab, Interior
Interior light.
Drink holder.
Ignition switch.
Front and rear windscreen wipers.
Front and rear windscreen washer.
Floor mat.
Seat with fabric or vinyl seat cover with or without arm rests.
Defroster.
Seat belt, retractable.
Power steering.
Hydrostatic heater.

Working Equipment
Backhoe, side-shift, excavator - two lever control.
Hydraulic boom transport lock.
Sideshift, locking.
Swing transport lock.
Loader, self-levelling with return-to-dig and transmission disconnect switch on loader lever.

OPTIONAL EQUIPMENT

Cab
Air Conditioning.
Air suspension and heated seat + arm rests.
Radio.
Speedometer.
Sun visor.
Wide seat belt.
Tilt steering wheel.

Working Equipment
Boom suspension system.
Steering wheel knob.
Extendible dipper.
Stabiliser street pads.
Lifting eye backhoe.

Hydraulics
Hammer hydraulic circuit.
Hammer rigid line.
Hand held hydraulic.

Lighting
Additional working lights (2 front, 2 rear).

Electrical System
Speedometer.
Reversing Alarm.
Battery, additional.

Safety
Hydraulic oil tank lockable cap.
Rotating beacon.
Boom and dipper safety valves.
Loader safety valve.
Front fenders.
Vandal guard.
Anti-theft key board.
Back up alarm.

Attachments
Cutting edge, bolt on.
Tooth, bolt on.
Front loader buckets.
Backhoe buckets.
Volvo hammer HB 440.
Mechanical attachment bracket.
Hydraulic attachment bracket.
Forks kit.

Volvo Construction Equipment is different. It's designed, built and supported in a different way. That difference comes from an engineering heritage of over 170 years. A heritage of thinking first about the people who actually use the machines. About how to help them be safer, more comfortable, more productive. About the environment we all share. The result of that thinking is a growing range of machines and a global support network dedicated to helping you do more. People around the world are proud to use Volvo. And we're proud of what makes Volvo different – **More care. Built in.**

All products are not available in all markets. Under our policy of continuous improvement, we reserve the right to change specifications and design without prior notice. The illustrations do not necessarily show the standard version of the machine.

VOLVO

Construction Equipment

www.volvoce.com

Ref No. 21 1 432 1197
Printed in PDF
Volvo, Belley

English
2007.03
BHL